Dimension Drawing - MPPT WireBox-XL	
SCC950400300	MPPT WireBox-XL MC4

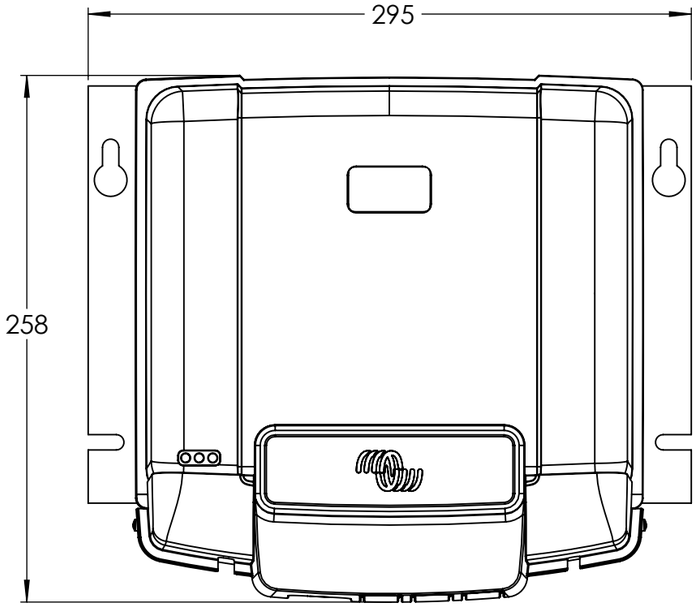

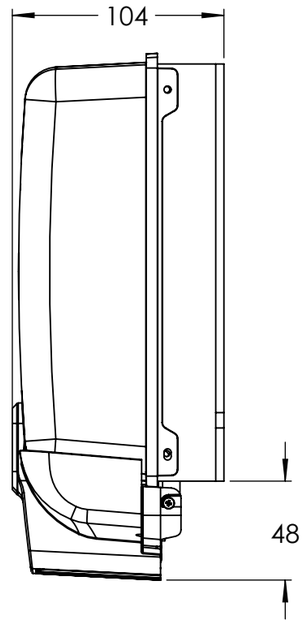

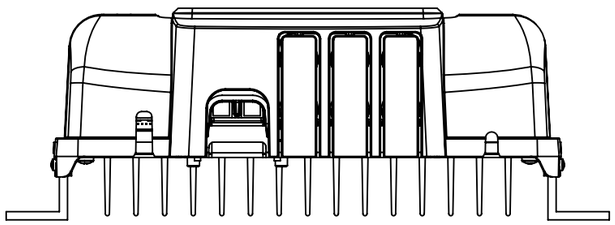

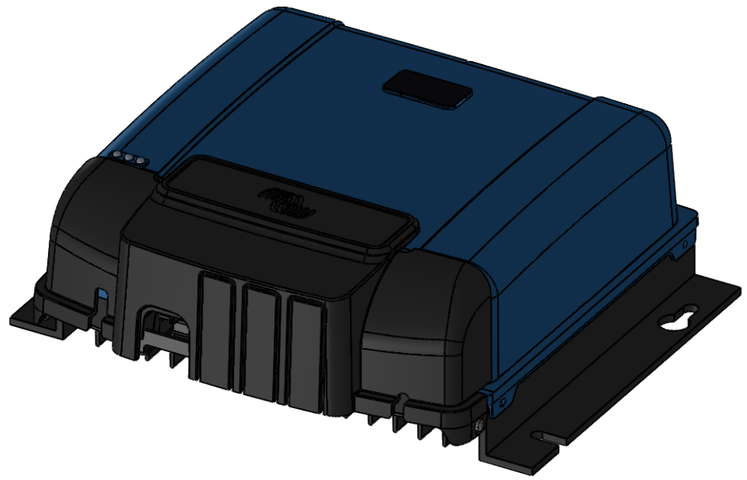

Dimensions in mm

victron energy
BLUE POWER